Project		**Catalog #**		**Type**	
Prepared by		**Notes**		**Date**	

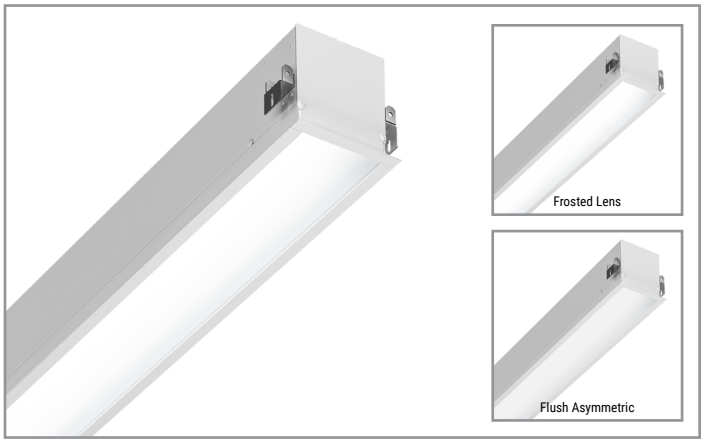

Corelite

CL4

LED
Recessed
Direct

Typical Applications
• Commerical Office Spaces • Schools • Hospitals • Retail Merchandising Areas

Interactive Menu

- Order Information page 2
- Photometric Data page 3
- Run Configurations page 3
- Integrated Sensor Details page 4
- Product Warranty

Product Certification

Product Features

Top Product Features

- 2" and 4" linear aperture sizes
- 4 ft. and 8 ft. lengths for individual or continuous runs
- High performance efficacy up to 122 lumens per watt
- Fits a variety of different architectural ceiling types
- Integrated wireless sensor control available

Dimensions

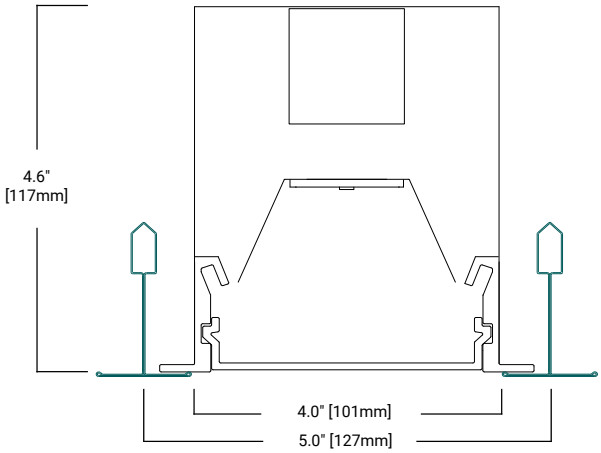

additional product diagrams

Order Information

SAMPLE ORDER NUMBER: **CL4DR-F-80D840-1B1-UNV-STD-WPS-CP-W-T1-20**

Domestic Preference (1)	Light Distribution	Shielding Down	Lumen Package Down	CCT & Min CRI	Circuiting
[Blank] = Standard **BAA** = Buy American Act	**CL4DR** = Corelite CL Series 4" Aperture Direct Recessed	**F** = Frosted Flush Diffuser **A** = Asymmetric Flush Optic	**40D** = 400 lumens/ft **60D** = 600 lumens/ft **80D** = 800 lumens/ft **100D** = 1000 lumens/ft **120D** = 1200 lumens/ft	**830** = 3000K, 80+ CRI **835** = 3500K, 80+ CRI **840** = 4000K, 80+ CRI **930** = 3000K, 90+ CRI **935** = 3500K, 90+ CRI **940** = 4000K, 90+ CRI	**1** = Single Circuit **S** = Secondary Circuit
Notes **(1)** Only product configurations with this designated prefix are built to be compliant with the Buy American Act of 1933 (BAA). Please refer to DOMESTIC PREFERENCES website for more information. Components shipped separately may be separately analyzed under domestic preference requirements.	**Notes**	**Notes** All lensing options are snap-in lenses	**Notes** Nominal lumen output. Refer to performance table on Page 3 for more detail.	**Notes** Additional lead-time may apply for 930, 935 and 940 configurations.	**Notes** Secondary circuit similar to A/B switching. Secondary circuit not available with sensor options.

Emergency	Voltage	Integral LED Driver	Integrated Sensor	Options
[Blank] = No Emergency **E** = Emergency Circuit **B1** = 7-watt 120V-277V Integral EM Battery **B2** = 14-watt 120V-277V Integral EM Battery **B3** = 6-watt 120V-277V Integral EM Battery **EPC** = EPC UL924 Device **WEM** = WaveLinx Enabled UL924	**UNV** = Universal (120-277V) **347** = 347V	**STD** = Standard 0-10V (1%-100%) **5LT** = Fifth Light DALI (5%-100%) **LH** = Lutron HiLume 1% EcoSystems (LDE1)	**[Blank]** = No Sensor **WLS** = WaveLinx LITE Wireless Sensor, Occupancy w/ photocell, Independent & Networked (1)(B) **WPS** = WaveLinx PRO Wireless Sensor, Occupancy w/ photocell, Networked (2)(A)	**CP** = Chicago Plenum
Notes Fixture Non-IC-Rated for internal battery and lumen output ≥1000 Lms/ft. External battery standard with chicago plenum. WaveLinx with UL924 bypass control (WEM) available with STD and WaveLinx Wireless Controls devices only. Reference WaveLinx page for additional details.	**Notes** 347V only available with STD driver.	**Notes** Additional lead-time may apply for 5LT and LH configurations.	**Notes** (1) WPS sensor to be used with STD or W2A driver. (2) WLS sensor to be used with STD driver. Integrated options must be used in conjunction with the associated system and may not be compatible with other options or accessories. Please refer to the following: (A) Consult WaveLinx PRO system pages for additional details and compatibility. (B) Consult WaveLinx LITE system pages for additional details and compatibility.	**Notes** Meets CCEC requirements

Finish	Ceiling Type	Length
W = White	**T1** = 15/16" T-Grid, 9/16" T-Grid **T2** = 9/16" Slot T-Grid, 9/16" Tegular T-Grid **FG** = Flanged (Gypsum Board)	**4** = 4' Individual **8** = 8' Individual **XX** = 4' Incremental Run (e.g. 40=40')
Notes	**Notes** Please refer to ceiling interface diagrams for additional detail and dimensions.	**Notes** Standard row configurations over 8' consist of 4' and 8' luminaires.

Product Specifications

Construction
- Formed housing with precision cut housing trim extruded from 6063 aluminum.
- Laser-cut formed cold rolled steel endcaps
- Die-formed 22 gauge cold rolled steel pre-paint white reflector
- Driver accessible from below

Lengths
- 4 ft and 8 ft fully illuminated sections for individual and continuous runs
- See table on page 3 for continuous row length breakdowns

Finish
- Electrostatically applied polyester powder coat paint

Mounting
- Recessed lay-in for T-grid installation or direct into gypsum with ½" flange
- All sections are continuously wired with plug-in connectors for fast installation
- Fixtures can be joined for straight continuous runs using rigid alignment features

Shielding
- Frosted (F) – Flush, high diffusion pixilation-free lens
- Asymmetric (A) – Flush, internal prismatic design for asymmetric distribution
- Patent-pending under-lens solution eliminates light leak

Light Engine
- LED's are available in 3000K, 3500K, 4000K
- CRI options of either ≥80CRI or ≥90CRI
- Lumen output will be affected - please refer to the lumen adjustment factor tables
- TM21 life at 60,000 hours up to L94 and calculated L70 exceeds 400,000 hrs
- Drivers available in 120-277V and 347V

Integrated Controls
- 0-10V dimming to 1% standard
- WaveLinx wireless sensor compatible for standalone, controlled, connected, and IoT capability
- DALI 2.0 and Lutron dimming options available

Emergency Options
- Default emergency circuit section (E) is 4 ft. in length and located at the beginning of the fixture unless designated elsewhere
- Optional 120-277V emergency battery provided internal to fixture with pre-wired external test switch
- 90-minute backup period for code compliance
- Estimated lumen output = battery wattage x min efficacy - see performance table (e.g. 100 lm/W x 14 = 1400 lumens)
- UL 924 emergency/generator transfer options available

WaveLinx with Emergency Circuit
- WaveLinx combined with emergency circuit require WaveLinx with UL924 bypass control (WEM) Emergency option.
- For UL924 compliance, WaveLinx with UL924 bypass control (WEM) luminaires or sections must be installed in the same application space as Normal Power Sensing beaconing WaveLinx devices.
- All WaveLinx sensor options come with Normal Power Sensing Beacons.
- UL924 Bypass Relay Devices (T) are not required when WaveLinx with UL924 bypass control (WEM) and WaveLinx devices with Normal Power Sensing beacons are installed in the same application space.
- WaveLinx with UL924 bypass control (WEM) available with WaveLinx Wireless Controls options as part of a WaveLinx control system.
- Reference WaveLinx section for additional details

Weight
- 2.7 lbs. per foot

Compliance
- cULus listed for damp locations
- Meets NYC requirements
- IC Rated for insulation contact (except where noted)
- Tested to IESNA LM-79 and LM-80
- Stated life per TM21 standards
- Can be used for State of California Title 24 high efficacy luminaire
- DesignLights Consortium® Qualified and classified for DLC Standard, refer to www.designlights.org for details

Warranty
- Five year limited warranty

Photometric Data

View IES files

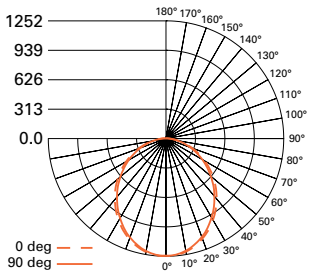

FILE NAME:
CL4DR-F-80D835-1-UNV-STD-W-4
LUMENS: 3203 Lms
LPW: 121.3 LPW
CCT: 3500K
WATTS: 26.2 W
TEST NUMBER: G3-1802-639-5

FROSTED FLUSH LENS

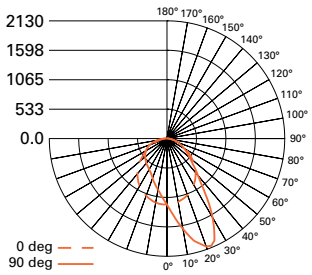

FILE NAME:
CL4DR-A-80D835-1-UNV-STD-W-4
LUMENS: 3331 Lms
LPW: 126.2 LPW
CCT: 3500K
WATTS: 26.4 W
TEST NUMBER: G3-1802-639-21

ASYMMETRIC LENS

Note: Refer to IES files for more product data.

Photometric Overview and Performance Data

CL4DR LED Light Level Outputs (3500K, 80 CRI)				
Series	Lumen Package	Delivered Lumens	Wattage	Efficacy LPW
		Per FT	Per FT	
CL4DR	40D	350	2.9	121
	60D	575	4.7	122
	80D	801	6.6	121
	100D	1021	8.7	117
	120D	1187	10.3	116

LUMEN ADJUSTMENT FACTORS

CCT	80CRI	90CRI
3000K	0.943	0.815
3500K	1.000	0.861
4000K	1.010	0.892

LUMEN ADJUSTMENT CALCULATIONS

Example - Adjusted Lumen Output
Nominal Lumen Output selected = 80D = 795 lms/ft (based on standard of 3500K/80CRI)
Lumen Adjustment Factor = 0.861 (3500K/90CRI desired)

Adjusted Lumen Output = Nominal Lumen Output x Lumen Adjustment Factor
Adjusted Lumen Output = 795 lms/ft x 0.861 = 685 lms/ft

Run Configurations

Standard Length	4ft	8ft	12ft	16ft	20ft	24ft	28ft	32ft	36ft	40ft	44ft	48ft	52ft	56ft	60ft	64ft	68ft	72ft	76ft	80ft	84ft	88ft	92ft	96ft
4ft	1		1		1		1		1		1		1		1		1		1		1		1	
8ft		1	1	2	2	3	3	4	4	5	5	6	6	7	7	8	8	9	9	10	10	11	11	12

Lumen Maintenance

Ambient Temperature	TM-21 Lumen Maintenance (60,000 hours)	Theoretical L70 (Hours)
25°C	>94%	>400,000

Ceiling Type

Extruded Trim Flange Details - Refer to submittal drawings for detailed flange information - for additional options consult factory.

Grid Ceiling Systems

Drywall Ceiling

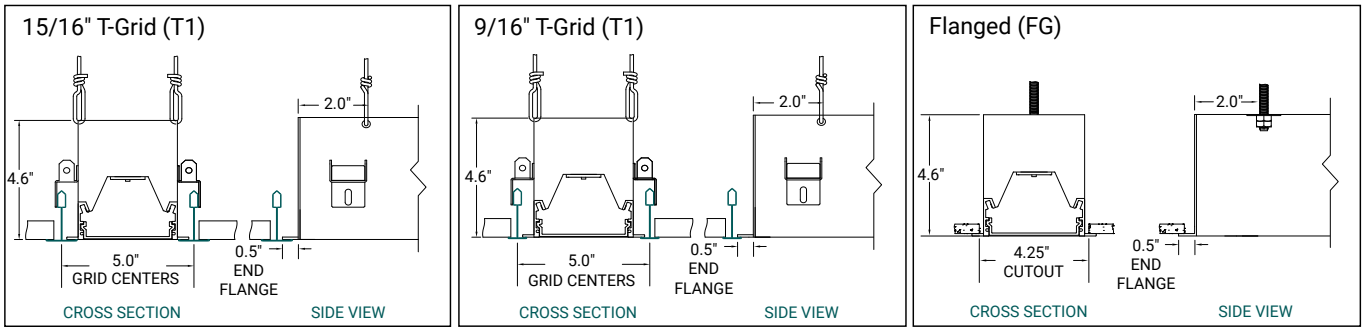

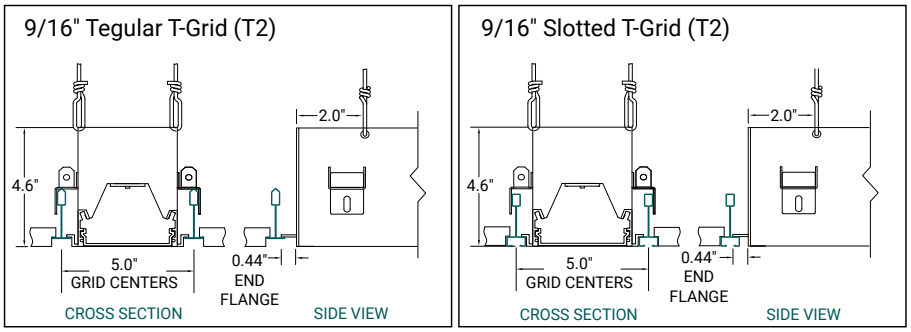

Drywall ceiling note: actual length of 'fg' fixures will be 1" shorter in length than total requested run length for all recessed fixtures

Overall run length = 'fixture order length' - 1"
e.g. - overall run length of 47" will ship when ordering a '4ft' fixture

Ceiling cutout = 'overall run length' + 0.25"
Or ceiling cutout = 'fixture order length' - 0.75"
e.g. - ceiling cutout when ordering a '4ft' length fixture will be 47.25"
e.g. - ceiling cutout when ordering a '20ft' length fixture will be 239.25"

Integrated Sensor Details and Placement

Sensor Type	Wireless	Sensor Integration	Sensor Mounting	Ordering Code
WaveLinx Pro	Yes	Integral to Fixture	Mounted in solid cover	WPS
WaveLinx Lite	Yes	Integral to Fixture	Mounted in solid cover	WLS

○ Standard Sensor with Luminaire Control
⊗ Auxiliary Sensor used for Sensor Coverge (wireless systems only)

INTEGRAL SENSOR LAYOUT EXAMPLES

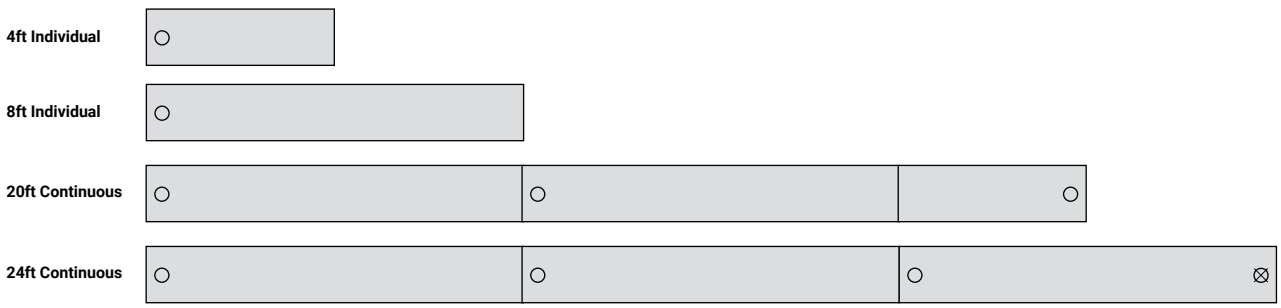

Control Solutions

- WaveLinx LITE wireless
- WaveLinx PRO wireless
- WaveLinx CAT wired
- WaveLinx Wired

WaveLinx Digital Lighting Control Solutions

Integrated Sensor Coverage Pattern

TOP VIEW:

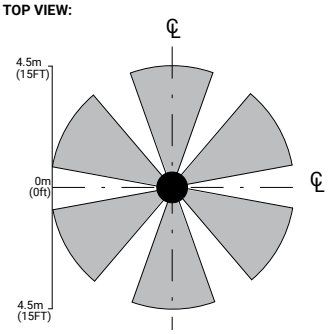

SIDE VIEW:

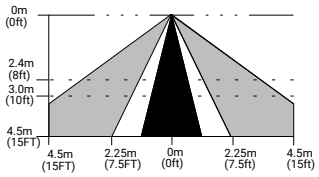

***Note**: Installation of integrated sensors within 3-ft (1m) of HVAC air vents is not recommended. The pattern shown is intended solely as a general guide and is not to scale.*

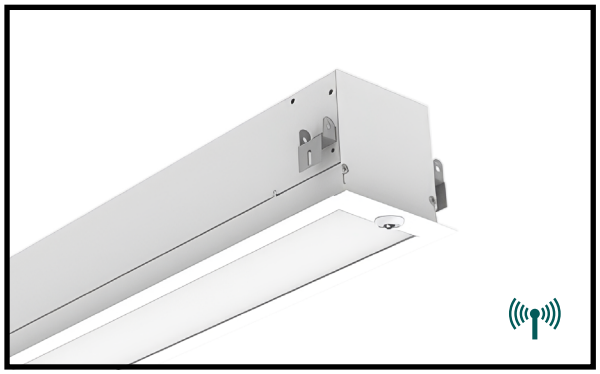

WaveLinx by Cooper Lighting Solutions is a wired and wireless solution for a single room, a parking lot, or an entire campus, helping meet energy codes, reduce energy use, and create healthier environments. As a true hybrid architecture, it enables the seamless integration of DALI, CAT, and PRO technologies and luminaires for unmatched reliability and flexibility, with sensor-enabled luminaires that can also share data with the WaveLinx CORE platform, further improving operations across office, education, healthcare, warehouse, and parking garage applications.

WaveLinx LITE is a Bluetooth wireless digital lighting control solution with out-of-the-box functionality that saves energy and meets energy codes. It's designed for applications that require occupancy-based, daylighting, or manual light control using WaveLinx LITE-enabled luminaires and a mobile app for cost-effective projects.

WaveLinx PRO is a Zigbee wireless solution that offers a rich portfolio of devices, WaveLinx PRO-enabled luminaires, and a mobile app and the WAC (WaveLinx Area Controller). It offers advanced energy savings and deep data integration to improve the occupant experience.

WaveLinx CAT is a scalable CAT5-wired solution for a single room and connected spaces, supporting applications that require occupancy-based, daylighting, or manual light control, with self-commissioning to meet energy codes and maximize energy savings.

WaveLinx DALI is a powerful two-wire DALI-2 solution for connected spaces, combining open-standard devices enabling interoperability with the simplicity of WaveLinx app-based commissioning. It delivers deterministic wired control, granular addressability, and tunable white.

Integrated Controls Options

Option	Out of the Box Functionality	Luminaire Level Lighting Control (LLLC)	Automatic Dimming Photocell	Occupancy Sensing	CCT Control*
WLS (WaveLinx LITE Sensor)	X	X	X	X	
WLN (WaveLinx LITE Node)		X			
WPS (WaveLinx PRO Sensor)		X	X	X	X
WPN (WaveLinx PRO Node)		X			X

Note: *WaveLinx utilizes scenes to allow users to change an area's fixtures Correlated Color Temperature (CCT) and intensity using a commissioned wireless wallstation scene controller. To enable CCT adjustments through WaveLinx, include WPS or WPN devices in addition to VividTune or BioUp technologies for integrated fixture control. WPS with CCT controls the intensity of the fixture; an additional, externally mounted control device is needed to control the CCT. See RSP-P-010-347

WaveLinx Emergency (WEM) solution must be ordered with WLS or WPS sensors. WEM must be associated with a group that includes a normal power sensing (NPS) device to receive NPS beacon. All WLS or WPS sensors have normal power sensing beacons when part of a WaveLinx control system.

Learn more about WaveLinx EM here.

WaveLinx EM

The WaveLinx Emergency (WEM) solution offered by WaveLinx wireless (PRO and LITE) makes it easy to design your UL924 certified emergency lighting solution. Fixture-integrated WaveLinx Emergency Modules (WEM) override lighting controls and increases light output to emergency level (100%) until normal power is restored. Needs programming. WaveLinx emergency systems are designed to meet UL 924 standards.

Learn more here.



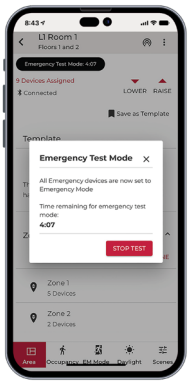

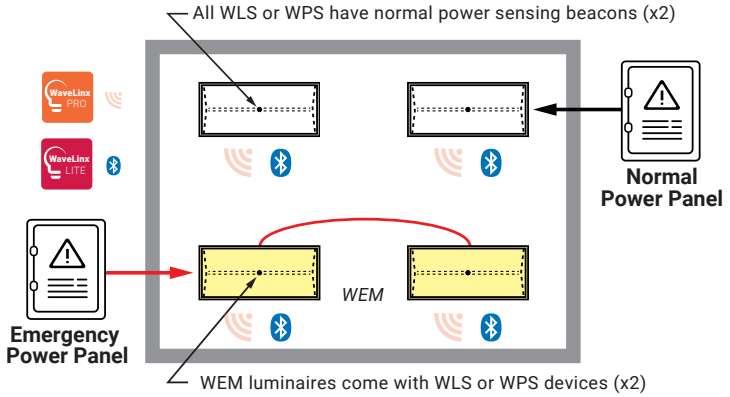

© 2026 Cooper Lighting Solutions
All Rights Reserved.

Specifications and dimensions subject to change without notice.