Project		Catalog #		Type	
Prepared by		Notes		Date	

Metalux

SPHB

LED Selectable Linear High Bay

Typical Applications

Industrial • Commercial • Retail • Manufacturing • Warehouse • Gymnasium [1] • Multi-purpose • Grocery • High Bay / Low Bay Applications

Note: (1) Rigid Stem mount not recommended for use in gymnasiums.

Interactive Menu

- Energy and Performance Data page 2
- Product Specifications page 4
- Photometric Data page 5
- Sensor Coverage page 5
- Product Warranty

Product Certification

Product Features

Top Product Features

- Compact linear design for easy install
- 3 sizes deliver lumens from 9,000 up to 60,000 lumens
- High performance efficacy up to 172 lm/W
- Optimized narrow, medium, or wide distribution
- Optional sensor ready port for in-field installation
- IK10 rated for unfriendly environments
- 10-Day Quick Spec available

Dimensional and Mounting Details

18 INCH

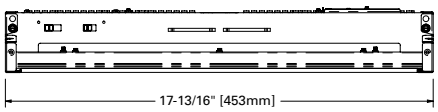

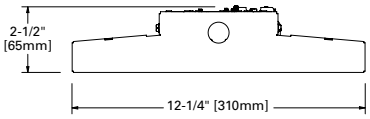

26 INCH

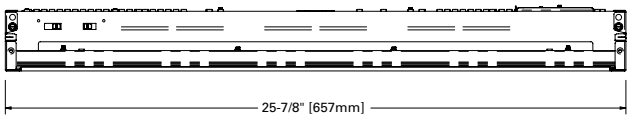

42 INCH

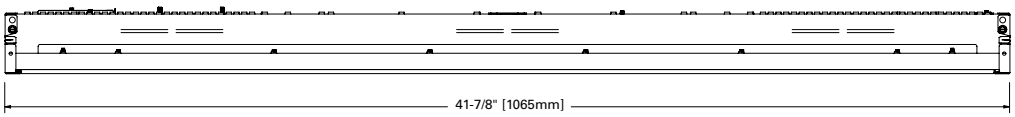

additional product diagrams

Stock is available in the follwing catalog numbers: V-hangers and 3ft Chain included on stock SKUs

Catalog Number	Description	UPC	Distribution	Voltage	Selectable CCT	Selectable Lumens	Wattage
SPHB-1224SE-M-UNV-L84050-CD-SP1-U	Selectable High Bay with Sensor Ready Port*	80083289264	Medium	120-277V	4000/5000	12,000 / 18,000 / 24,000	82 / 123 / 164
SPHB-2436SE-M-UNV-L84050-CD-SP1-U	Selectable High Bay with Sensor Ready Port*	80083289288	Medium	120-277V	4000/5000	24,000 / 30,000 / 36,000	162 / 209 / 250

* To be used in conjunction with optional UHBS-SENSOR only (sold separately)

Order Information

SAMPLE ORDER NUMBER: **SPHB-1224-M-UNV-L84050-CD-SP1-U** Includes V Hangers for rapid installation (chain sold separately)

Gray bar denotes 10-Day Quick Spec

Quick Spec [37]	Series	Lumen Package	Efficacy	Ambient Temperature Rating	Distribution	Voltage	CRI & CCT
QS=Quick Spec [37]	**SPHB**=SelectPro High Bay	**1224**=Lumen select 12000/18000/24000 [1], [33] **2436**=Lumen select 24000/30000/36000 [1], [33] **9**=9,000 lumens **12**=12,000 lumens **15**=15,000 lumens **18**=18,000 lumens **24**=24,000 lumens **30**=30,000 lumens **36**=36,000 lumens **48**=48,000 lumens **60**=60,000 lumens	**SE**=Standard Efficacy **HE**=High Efficacy [2], [3]	**[Blank]**=45°C **HA**=55°C [4], [5], [6], [7], [8]	**N**=Narrow **M**=Low-glare Medium **W**=Wide	**UNV**=120–277 [9] **UNC**=347–480 [9], [10], [33] **120V**=120 **277V**=277 **347V**=347 **480V** 480	**L84050**=CCT select, 80 CRI, 4000K/5000K [11], [33] **L735**=70 CRI, 3500K [12] **L740**=70 CRI, 4000K [12] **L750**=70 CRI, 5000K [12] **L835**=80 CRI, 3500K **L840**=80 CRI, 4000K **L850**=80 CRI, 5000K **L935**=90 CRI, 3500K [12] [13] **L940**=90 CRI, 4000K [12] [13] **L950**=90 CRI, 5000K [12] [13]
Notes (37) QS=100 luminaires maximum order.		**Notes** (1) Available with CRICCT L84050 only. (33) Lumen and CCT select not available in UNC voltage.	**Notes** (2) Not available with CRICCT L84050. (3) Not available with UPL10.	**Notes** (4) Not available with lumen packages 1224, 2436, or 60. (5) Not available with UPL10. (6) When HA is combined with lumen package 24, luminaire length increases from 18 to 26 inches. (7) When HA is combined with lumen package 36, luminaire length increases from 26 to 42 inches. (8) Luminaire must be suspended no less than 12 inches below ceiling surface(s).		**Notes** (9) UNV and UNC not available when luminaire is equipped with cord and plug, specify 120V, 277V, 347V, or 480V instead. (10) UNC not available when luminaire is equipped with EL14WHV or EL20WHV, specify 347V or 480V instead. (33) Lumen and CCT select not available in UNC voltage.	**Notes** (11) Available with lumen packages 1224 and 2436 only. (12) Not available with UPL10. (13) Available with efficacy SE only. (33) Lumen and CCT select not available in UNC voltage. .

Emergency Lighting Devices [14]	Driver Type	Integrated Wiring [21], [22]
EL14WHV=Integrated Class 1, 14 Watt 120-277V emergency battery pack with test switch and charge indicator [14], [15], [16] **EL20WHV**=Integrated Class 1, 20 Watt, 120-277V emergency battery pack with test switch and charge indicator [14], [15], [16] **GTDU**=Integrated 120-277V automatic transfer device for generator or central inverter supplied power with dim override [17], [18]	**CD**=0-10V Dimming Driver [19] **5LTD**=Fifth Light DALI [20]	**C_ (1)**=1 Circuit, Cord with no Plug [23] **C_ (2)**=2 Circuit, Cord with no Plug _ length of cord in feet and can be 3, 6, or 10 **PC3/120**=3ft Cord with NEMA L5-15P Plug [23] **PC3/277**=3ft Cord with NEMA L7-15P Plug [23] **PC3/347**=3ft Cord with NEMA L24-20P Plug [23] **PC3/480**=3ft Cord with NEMA L8-20P Plug [23] **PC6/120**=6ft Cord with NEMA L5-15P Plug [23] **PC6/277**=6ft Cord with NEMA L7-15P Plug [23] **PC6/347**=6ft Cord with NEMA L24-20P Plug [23] **PC6/480**=6ft Cord with NEMA L8-20P Plug [23] **MP**=Modular Power Receptacle [23], [24]
Notes (14) Emergency options rated for 0°C to 40°C ambient. (15) Device location (internal vs. rear-mounted) depends on configuration. When rear-mounted, some optional mounting methods are rendered incompatible. For more details, see TABLE 1. (16) Luminaire must be suspended at least 12 inches from ceiling surface when equipped with EL14WHV or EL20WHV. (17) Available with voltage UNV only. (18) When normal AC power is lost, the GTDU automatically switches the driver to the emergency power supply, bypassing the local wall switch and, if provided, opens the 0-10VDC dimming signal bringing on the luminaire to full light output. An unswitched, normal AC power source and a direct, unswitched connection to a generator or central inverter supplied emergency panel is required.	**Notes** (19) 0-10V dimming driver(s) feature dim-to-off in most configurations, for specific details please contact factory. (20) Not available with lumen packages 9, 1224, or 2436.	**Notes** (21) Integrated wiring options exit luminaire through knockout on rear access plate, see dimensional diagrams. (22) Integrated wiring options are not available when luminaire is equipped with GTDU. (23) Not available with EL14WHV or EL20WHV. (24) Requires use of MC or MPC cord accessory, ordered separately.

Options	Motion Sensors	Packaging
UPL10=10% Active Uplight [25], [26], [27], [28], [29]	**SP1**=Sensor Ready Port to be used in conjunction with the HBS1 or WLS4-HB2 sensors (sold separately) [32] **WLS2**=WaveLinx LITE integrated Sensor, Dim and Daylight, Bluetooth, 8" MH [34], [35] **WLS4-HB2**=WaveLinx LITE Integrated T-port Sensor, Dim and Daylight, Bluetooth, 15'-40' MH SP1 sensor ready port is included as part of install [32], [34] **WLS4**=WaveLinx LITE ZHAGA Sensor, Dim and Daylight, ZigBee, 15'-40' MH [34], [35] **WPS4**=WaveLinx PRO ZHAGA Sensor, Dim and Daylight, ZigBee, 15'-40' MH [34]	**U**=Unit Pack **PALC**=Job Pack, in carton [36]
Notes (25) Ambient temperature rating is reduced from 45°C to 35°C when luminaire is equipped with UPL10. (26) Not available with lumen package 60. (27) When UPL10 is combined with lumen package 24, luminaire length increases from 18 to 26 inches. (28) When UPL10 is combined with lumen package 36, luminaire length increases from 26 to 42 inches. (29) Active uplight increases fixture wattage by approximately 10%. CRI and CCT of uplight matches downlight. Dim level and on/off state of uplight is synchronized with downlight and cannot be controlled independently.	**Notes** (32) Driver(s) features dim-to-off when luminaire is equipped with SP1. (34) Not available with lumen package 9, 1224, or 2436 when voltage is UNC, 347V, or 480V. (35) WaveLinx Lite devices are not currently compatible with the WaveLinx Pro Wireless Area Controller.	**Notes** (36) Configurations with rear-mounted battery are not available as PALC. See TABLE 1 for details.

See next page for stock catalog numbers

Energy and Performance Data

Stock is available in the following catalog numbers:

Catalog#	UPC	Voltage	Lumen Setting	CCT Setting	Lumens	Watts	Efficacy (lm/W)
SPHB-1224SE-M-UNV-L84050-CD-SP1-U	080083289264	120-277	Low	4000	12,853	82	157
				5000	12,851	82	157
			Med	4000	18,802	123	153
				5000	18,646	123	152
			High	4000	24,190	164	147
				5000	24,120	164	147
SPHB-2436SE-M-UNV-L84050-CD-SP1-U	080083289288	120-277	Low	4000	24,912	162	154
				5000	24,799	162	153
			Med	4000	31,161	209	149
				5000	30,731	208	148
			High	4000	36,237	251	144
				5000	35,747	249	144

Ambient Temperature Limit

Lumen Package	Standard (1)	w/ -HA	w/ -UPL10
SPHB-1224	45° C	—	—
SPHB-2436	45° C	—	—
SPHB-9	45° C	55° C	35° C
SPHB-12	45° C	55° C	35° C
SPHB-15	45° C	55° C	35° C
SPHB-18	45° C	55° C	35° C
SPHB-24	45° C	55° C	35° C
SPHB-30	45° C	55° C	35° C
SPHB-36	45° C	55° C	35° C
SPHB-48	45° C	55° C	35° C
SPHB-60	45° C	—	—

Notes: (1) Ambient temperature drops from 45°C to 40°C when luminaire includes emergency lighting options EL14WHV, EL20WHV or GTDU.

SPHB SE - 4000K 80CRI

Catalog Number	Lumens			Watts	Efficacy		
	N	M	W	120V	N	M	W
SPHB-9SE	9244	9263	9374	55	169	169	171
SPHB-12SE	12717	12742	12895	76	167	167	169
SPHB-15SE	15706	15737	15926	96	164	164	166
SPHB-18SE	19202	19240	19471	117	164	164	166
SPHB-24SE	24786	24836	25134	159	156	157	158
SPHB-30SE	31181	31243	31618	195	160	160	162
SPHB-36SE	37116	37190	37636	241	154	154	156
SPHB-48SE	49023	49121	49710	305	161	161	163
SPHB-60SE	59316	59435	60148	376	158	158	160

SPHB SE - 5000K 80CRI

Catalog Number	Lumens			Watts	Efficacy		
	N	M	W	120V	N	M	W
SPHB-9SE	9269	9287	9399	55	169	169	172
SPHB-12SE	12750	12775	12929	76	167	167	169
SPHB-15SE	15747	15778	15968	96	164	165	167
SPHB-18SE	19252	19290	19522	117	164	164	166
SPHB-24SE	24851	24901	25200	159	157	157	159
SPHB-30SE	31262	31325	31701	195	160	161	163
SPHB-36SE	37213	37288	37735	241	155	155	157
SPHB-48SE	49151	49250	49841	305	161	162	163
SPHB-60SE	59472	59591	60306	376	158	158	160

SPHB HE - 4000K 80CRI

Catalog Number	Lumens			Watts	Efficacy		
	N	M	W	120V	N	M	W
SPHB-9HE	8929	8947	9054	53	168	168	170
SPHB-12HE	12023	12047	12192	71	169	169	171
SPHB-15HE	14924	14954	15133	88	169	169	171
SPHB-18HE	18002	18038	18254	108	167	167	169
SPHB-24HE	24007	24055	24344	146	164	165	167
SPHB-30HE	30056	30116	30477	178	169	170	172
SPHB-36HE	35974	36046	36479	216	167	167	169
SPHB-48HE	47970	48066	48643	289	166	167	169
SPHB-60HE	59562	59681	60397	363	164	164	166

SPHB HE - 5000K 80CRI

Catalog Number	Lumens			Watts	Efficacy		
	N	M	W	120V	N	M	W
SPHB-9HE	8953	8970	9078	53	168	168	170
SPHB-12HE	12054	12079	12224	71	170	170	172
SPHB-15HE	14963	14993	15173	88	169	170	172
SPHB-18HE	18049	18085	18302	108	167	167	169
SPHB-24HE	24070	24118	24408	146	165	165	167
SPHB-30HE	30135	30195	30557	178	170	170	172
SPHB-36HE	36068	36141	36574	216	167	167	169
SPHB-48HE	48096	48192	48770	289	167	167	169
SPHB-60HE	59718	59838	60556	363	165	165	167

Energy and Performance Data

Lumen Maintenance

Ambient Temperature	TM-21 Lumen Maintenance (60,000 hours)	Theoretical L70 (hours)
25ºC	> 88%	> 173,000

Ambient Temperature Limit

Lumen Package	Standard (1)	w/ -HA	w/ -UPL10
SPHB-1224	45° C	—	—
SPHB-2436	45° C	—	—
SPHB-9	45° C	55° C	35° C
SPHB-12	45° C	55° C	35° C
SPHB-15	45° C	55° C	35° C
SPHB-18	45° C	55° C	35° C
SPHB-24	45° C	55° C	35° C
SPHB-30	45° C	55° C	35° C
SPHB-36	45° C	55° C	35° C
SPHB-48	45° C	55° C	35° C
SPHB-60	45° C	—	—

Notes: (1) Ambient temperature drops from 45°C to 40°C when luminaire includes emergency lighting options EL14WHV, EL20WHV, or GTDU.

Length (1)

Lumen Package	Standard	w/ -HA	w/ -UPL10
SPHB-1224	18 inches	—	—
SPHB-2436	26 inches	—	—
SPHB-9	18 inches	18 inches	18 inches
SPHB-12	18 inches	18 inches	18 inches
SPHB-15	18 inches	18 inches	18 inches
SPHB-18	18 inches	18 inches	18 inches
SPHB-24	18 inches	26 inches	26 inches
SPHB-30	26 inches	26 inches	26 inches
SPHB-36	26 inches	42 inches	42 inches
SPHB-48	42 inches	42 inches	42 inches
SPHB-60	42 inches	—	—

Notes: (1) Nominal lengths shown. For exact dimensions, refer to dimensioned diagrams.

Net Weight (1)

Lumen Package	Standard	w/ -HA	w/ -UPL10
SPHB-1224	6 lbs	—	—
SPHB-2436	8 lbs	—	—
SPHB-9	6 lbs	6 lbs	6 lbs
SPHB-12	6 lbs	6 lbs	6 lbs
SPHB-15	6 lbs	6 lbs	6 lbs
SPHB-18	6 lbs	6 lbs	6 lbs
SPHB-24	6 lbs	8 lbs	8 lbs
SPHB-30	8 lbs	8 lbs	10 lbs
SPHB-36	8 lbs	14 lbs	14 lbs
SPHB-48	12 lbs	12 lbs	12 lbs
SPHB-60	12 lbs	—	—

Notes: (1) Net weight shown is of base luminaire. Optional factory-installed hardware such as integrated emergency lighting devices, integrated sensors, step-down transformers, etc. will increase the net weight of the luminaire. In some configurations, the increase in net weight due to optional factory-installed hardware may exceed the weight of the hardware itself, due to the inclusion of counterweights necessary to offset longitudinal imbalance.

Table 1

The following configurations are incompatible with the single point mount kit SPHB-SPM and surface mount kit SPHB-SMK due to rear-mounted emergency battery pack.

Lumen Package	Efficacy	Temp	Distribu-tion	Voltage	CRI/CCT	Emergency Lighting	Driver Type	Integrated Wiring	Options	Integrated Sensors	Packaging
1224, 2436, 9, 12, 15, 18, 24, 30	Any	Any	Any	347V 480V	Any	EL14WHV EL20WHV	Any	Any	Any	Any	Any
36	Any	Any	Any	347V 480V	Any	EL14WHV EL20WHV	Any	Any	Without UPL10	Any	Any

Product Specifications

Construction

- Durable CRS housing provides added protection for LED components and optimal performance
- Compact, low-profile design for easy installation
- High impact, polycarbonate lens protects LEDS and provides optimal distribution
- IK10 rated

Electrical

- Long-life LED system with electronic driver for optimal performance
- Optional selectable power switch for 3 levels of lumen output per model
- Optional selectable color switch provides 4000 or 5000K CCT at CRI ≥80
- Electronic drivers are available for 120-277V, 347V, and 480V applications
- 0-10V dimming drivers standard
- Standard operating temperature range of -40°C to 45°C
- High Ambient option extends operating temperature range to 55°C maximum
- Digital Addressable Lighting Interface (DALI) drivers available for use with Fifth Light controls
- Emergency rated for 0°C to 40°C ambient

Optics

- Offered in narrow, low-glare medium, and wide distributions

Mounting

- Suitable for suspension mounting with V-hangers (included) and optional chain set
- Optional Y-toggle suspension kits are available
- Optional single-point and surface mount kits are available

Compliance

- cULus listed for damp locations
- IESNA LM-79 and LM-80 standards compliant
- Qualifies as State of California Title 24 nonresidential high efficiency luminaire
- FCC part 15 class A compliant
- DesignLights Consortium® Qualified and classified for both DLC Standard and DLC Premium, refer to www.designlights.org for details.

Sensor

- Accessory Plug and Play HBS1 sensor available for use with optional (SP1) sensor ready port
- Integrated WaveLinx sensor options provide wireless individual fixture control and enable code compliance, increased energy savings, grouping of fixtures, and connection to WaveLinx control systems
- WaveLinx industrial sensors offer installation heights up to 40 feet (45ft major motion) and have coverage patterns up to 5000 square feet (see sensor specifications - field of view
- Available in stock, WaveLinx LITE wireless sensor with T-connection using SP1 port. Order as accessory for in-field installation.

Finish

- White powder coat finish painted after fabrication

Warranty

- Five year limited warranty

Accessories List (sold separately)

Catalog Number	Description
WLS4-HB2 (6)	WaveLinx LITE Wireless Sensor, Audio Jack, 3400 sqft coverage at 40FT MH Accessory Kit
HBS1	PIR Sensor Kit w/ 360° Lens
HBS SENSOR REMOTE	HBS Sensor Remote Control (IR)
SPHB-SMK (1), (2), (3), (4)	Surface Mount Kit
SPHB-SPM (4), (5), (8)	Single Point Mounting Kit with 3/4" NPT hub and splice box
Y-TOGGLE-10-2PK	(2) Y-Toggle Cable Kits (10ft length)
Y-TOGGLE-30-2PK	(2) Y-Toggle Cable Kits (30ft length)
AYC-CHAIN/SET-U	(2) 36-inch Chain Sets with S-Hooks
SPHB-WG18	Wire Guard for 18-inch SPHB models
SPHB-WG26	Wire Guard for 26-inch SPHB models
SPHB-WG42	Wire Guard for 42-inch SPHB models
MPC3 (7)	3ft. Modular Power Cord & Plug (Specify Voltage)
MPC6 (7)	6ft. Modular Power Cord & Plug (Specify Voltage)
MC3 (7)	3ft. Modular Power Cord
MC6 (7)	6ft. Modular Power Cord

Notes: (1) Not for use with luminaire configurations with emergency lighting options EL14WHV, EL20WHV, or GTDU. (2) Not for use with luminaire configurations with ambient temperature rating HA. (3) Qty. 1 per luminaire is required for 18-inch configurations of SPHB. Qty. 2 per luminaire is required for 26- and 42-inch configurations of SPHB. (4) Not compatible with luminaire configurations with rear-mounted hardware. See Table 1 for details. (5) Central knockouts on the rear of the luminaire housing allow passage of wiring directly between the splice box and the luminaire housing in most configurations, for a list of exceptions, see Table 2. (6) Requires integrated sensor option SP1 in luminaire catalog number. EBP cannot be used with SPHB and WLS4-HB2 sensor accessory. (7) Requires integrated wiring option MP in luminaire catalog number. (8) Recommended for use with rigid pendant mount only. Some luminaire configurations may depend on the included chain set and V-hangers to achieve levelness.

For coverage information and sensor details, click here

Photometric Data

View IES files

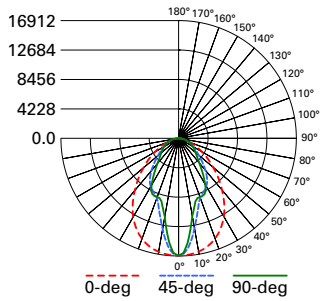

SPHB-24SE-N-L840-CD
Electronic Driver
Linear LED 4000K
Spacing criterion: (II) 1.16 x mounting height, (⊥) 0.54 x mounting height
Lumens: 24786
Input Watts: 158.6W
Efficacy: 156.3 LPW
Test Report: SPHB-24SE-N-L840-CD.IES

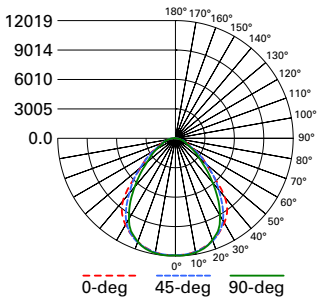

SPHB-24SE-M-L840-CD
Electronic Driver
Linear LED 4000K
Spacing criterion: (II) 1.25 x mounting height, (⊥) 1.16 x mounting height
Lumens: 24836
Input Watts: 158.6W
Efficacy: 156.6 LPW
Test Report: SPHB-24SE-M-L840-CD.IES

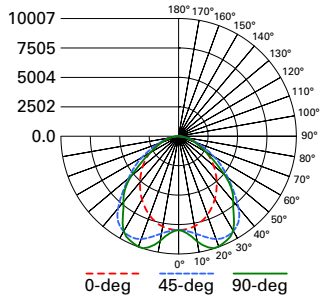

SPHB-24SE-W-L840-CD
Electronic Driver
Linear LED 4000K
Spacing criterion: (II) 1.16 x mounting height, (⊥) 1.5 x mounting height
Lumens: 25134
Input Watts: 158.6W
Efficacy: 158.5 LPW
Test Report: SPHB-24SE-W-L840-CD.IES

Dimensional and Mounting Details

18 INCH - NO SENSOR

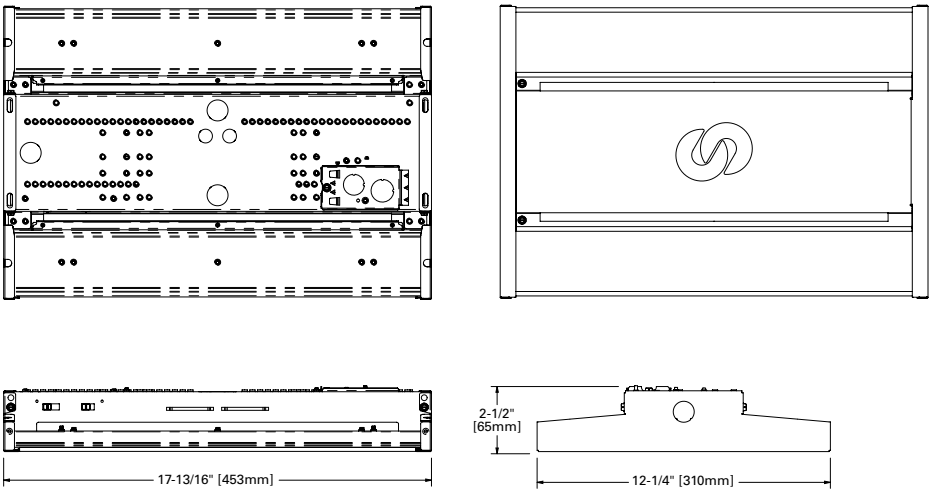

26 INCH - NO SENSOR

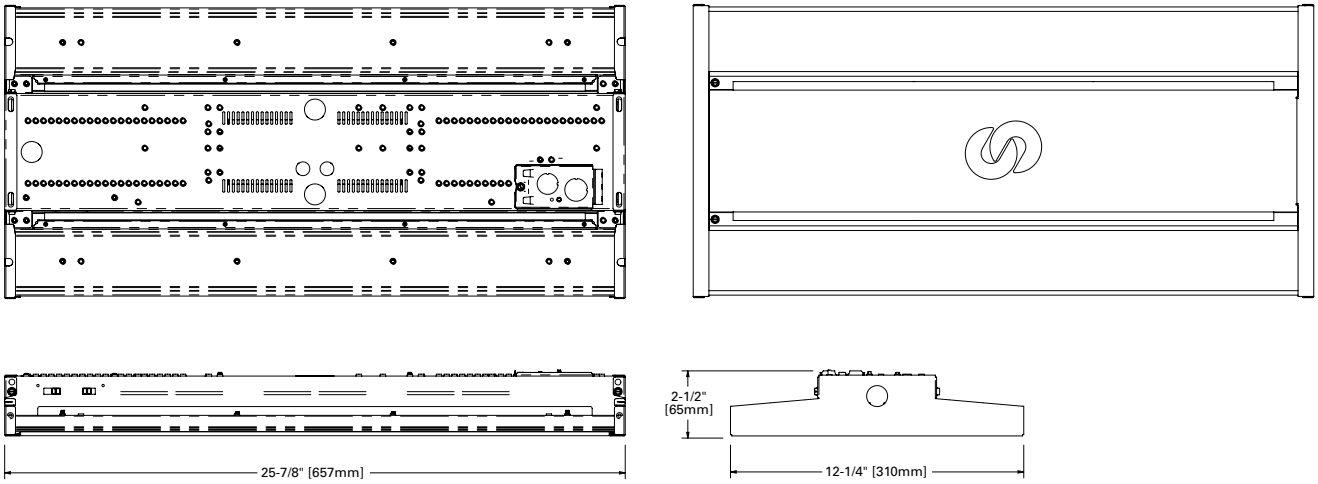

Dimensional and Mounting Details

42 INCH - NO SENSOR

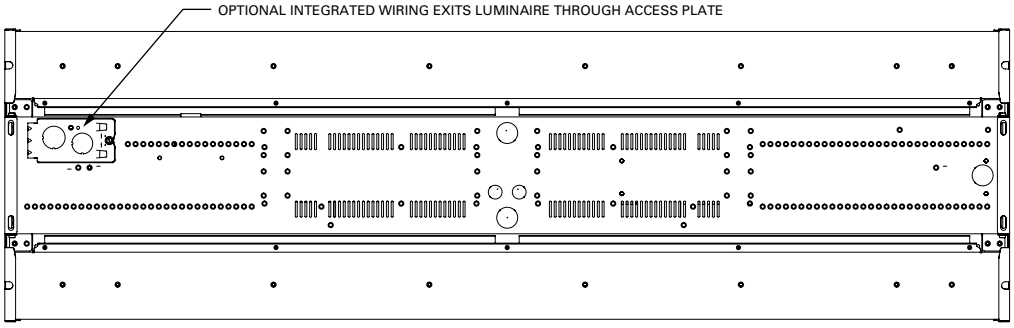

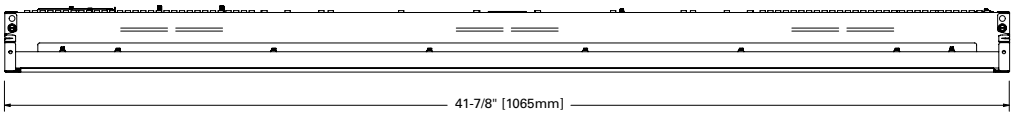

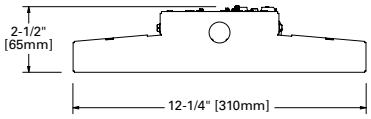

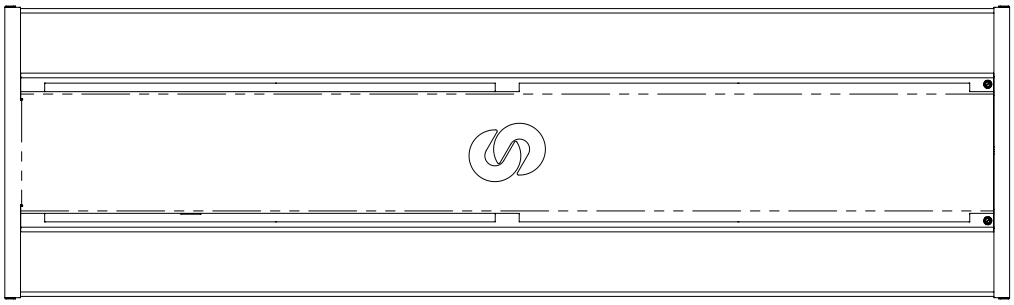

42 INCH - SENSOR

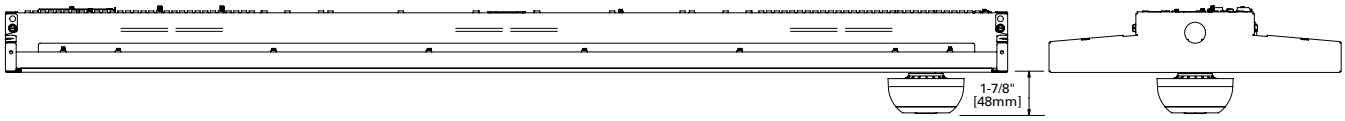

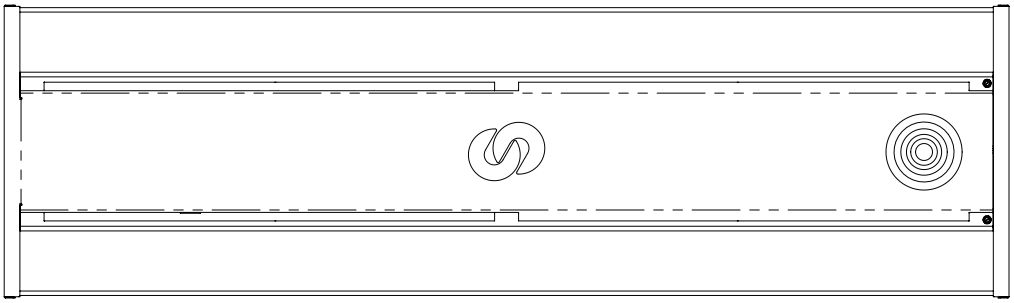

42 INCH - WIRE GUARD

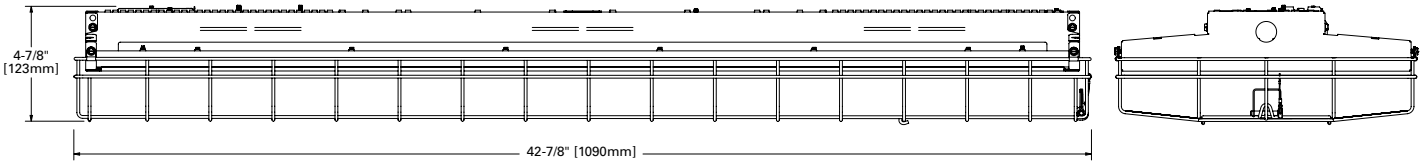

Dimensional and Mounting Details

42 INCH - SURFACE MOUNT KITS

42 INCH - SINGLE POINT MOUNT KIT

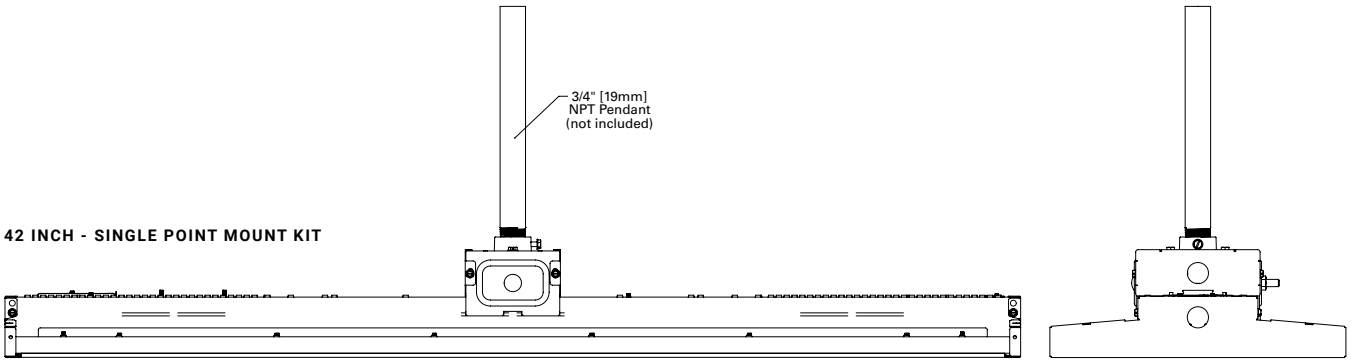

18 INCH - REAR BATTERY

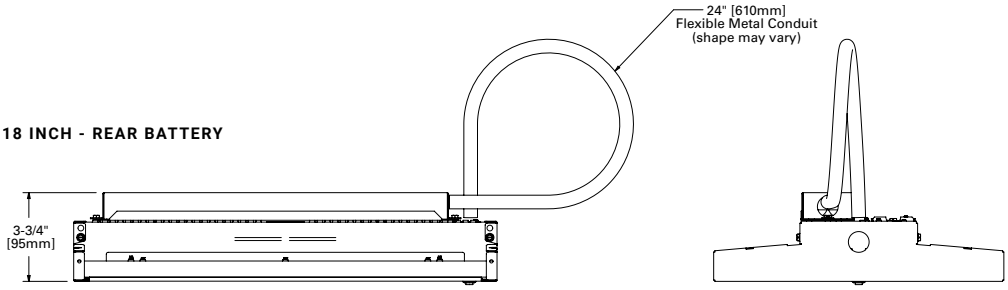

Control Solutions

- WaveLinx LITE wireless
- WaveLinx PRO wireless
- WaveLinx CAT wired
- WaveLinx Wired

WaveLinx Digital Lighting Control Solutions

The SPHB with WaveLinx offers no-hassle lighting control with multiple luminaire level control solutions.

WaveLinx PRO is a wireless lighting control solution, for connected spaces, that significantly reduces a building's energy consumption. From a single floor to an entire campus, WaveLinx PRO connects more than lighting assets; it shares aggregated sensor data with the WaveLinx CORE platform and other building systems, so building owners can improve operations, spaces environment, and tenants' experience. WaveLinx PRO offers a rich portfolio of wireless devices, WaveLinx PRO-enabled luminaires, and an intuitive WaveLinx mobile app for office, education, warehouse, and parking garage applications.

WaveLinx LITE is a cost effective, wireless digital lighting control solution, with out-of-the-box functionality, that saves energy and meets code. It's designed for applications that require occupancy-based, daylighting, or manual light control. Customize installations for office, education, warehouse and parking garages using the secure, simple mobile app.

Integrated Sensor Coverage Pattern

WaveLinx PRO/LITE Sensor – WLS2 and WPS2

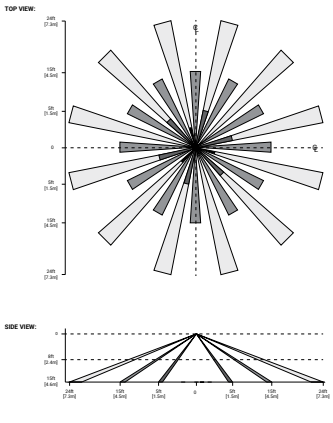

WaveLinx PRO/LITE Sensor – WLS4 and WPS4

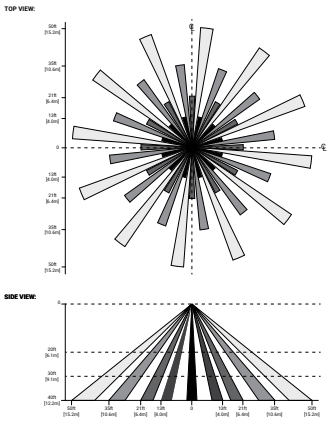

With Integrated WaveLinx Sensor

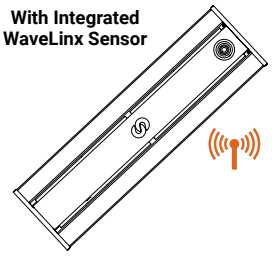

Integrated Controls Options					
Option	**Out of the Box Functionality**	**Luminaire Level Lighting Control (LLLC)**	**Automatic Dimming Photocell**	**Occupancy Sensing**	**CCT Control**
WLS	X	X	X	X	
WPS		X	X	X	
WLS4-HB2	X	X	X	X	

Systems comparison chart

Cooper Lighting Solutions provides many lighting system solutions designed to satisfy code requirements and meet the unique needs of any project.

	Luminaire with standalone sensor	**Standalone Spaces** WaveLinx LITE	**Standalone Spaces** WaveLinx CAT	**Networked Spaces** WaveLinx PRO	**Enterprise** WaveLinx CORE
Occupancy	Yes	Yes	Yes	Yes	Yes
Daylighting	Yes	Yes	Yes	Yes	Yes
Wallstations	–	Yes	Yes	Yes	Yes
Gateways	–	–	–	1 WAC	300 WACs
Devices (MAX)	–	40 per Area (1120 per space)	40 per Area	200 per WAC2	32,500 per CORE Enterprise
Software	–	WaveLinx LITE Mobile App	WaveLinx CAT Mobile App	WaveLinx Mobile App	CORE
Areas	–	28 per Space	Unlimited	50 per WAC2	up to 3,000
Zones	–	16 per Area	16 per Area	16 per Area	up to 9,000
Scheduling	–	–	–	Local	Global
VividTune™	–	–	–	Yes	Yes
Plug-Load Control	–	Yes	Yes	Yes	Yes
Low-Voltage Power	–	–	Yes	Yes	Yes
Integration	–	–	–	–	BACnet, API
Dashboards	–	–	–	–	Energy, Occupancy
Configuration	–	Installer	Installer	Technician	Technician / IT

Cooper Lighting Solutions
1121 Highway 74 South
Peachtree City, GA 30269
P: 770-486-4800
www.cooperlighting.com

© 2026 Cooper Lighting Solutions
All Rights Reserved.

Specifications and dimensions subject to change without notice.