Metalux

DESCRIPTION

The TB luminaire designed for commercial and industrial low-bay applications is an innovative solution that delivers an unparalleled combination of performance and visual comfort. The patented WaveStream™ optical technology provides optimal distribution and glare control in both medium and wide distributions.

Catalog #		**Type**
Project		
Comments		**Date**
Prepared by		

SPECIFICATION FEATURES

Construction
One-piece, low copper die-cast aluminum housing provides a clean and symmetric housing. Metal electrical tray allows for easy electrical access for field servicing.

Electrical
0-10V dimming driver(s) standard. TM-21. Suitable for ambient temperature applications from -40°C (-40°F) to 40°C (104°F).

Finish
Housing finishes include white, black and bronze and are painted after fabrication for lasting durability

Optics
Manufactured using precision injection molded acrylic. The WaveStream optics contain features that form a repeatable and redundant pattern to direct light in a precisely prescribed distribution. Minimum 80 CRI. Available in medium and wide distribution.

Mounting
Standard fixture mounts to a square or octagonal 4" surface or recessed j-box via heavy-gauge quick mount bracket. Included kit allows for hook mount. Other mounting options available.

Warranty
Five-year warranty.



TB TOP BAY LED

Solid State LED

Low Bay

powered by fifthlight technology

MWS MODULAR WIRING SYSTEM CLICK HERE

DIMENSIONS

SURFACE MOUNT

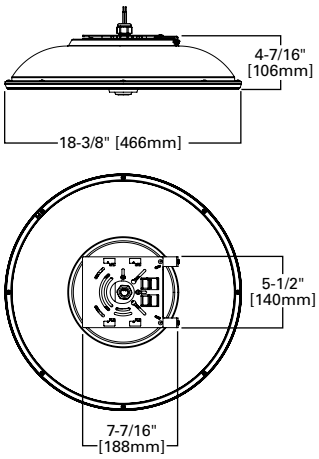

HOOK /PIPE MOUNT (INCLUDED)

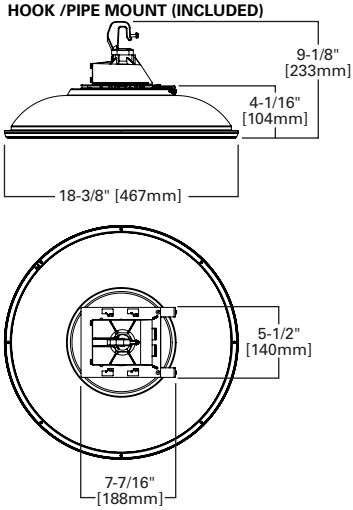

WALL MOUNT

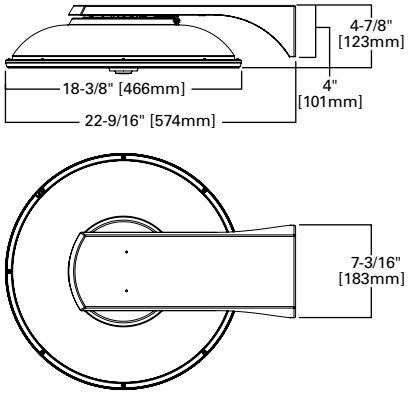

PENDANT MOUNT

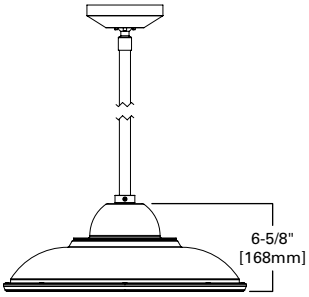

CERTIFICATION DATA

UL/cUL Wet Location Listed
LM79 / LM80 Compliant
IP66 Rated (Surface and Wall Mount Only)
ISO 9001

ENERGY DATA

Electronic LED Driver
>0.9 Power Factor
<20% Total Harmonic Distortion
120-277V/50 & 60Hz, 347V/60Hz, 480V/60Hz
-40°C Min. Temperature
40°C Max. Temperature

Input Watts:
6 (6,000 lumens)=51W
8 (8,000 lumens)=77W
11 (11,000 lumens)=108W

SHIPPING DATA

Approximate Net Weight:
16 lbs. (7.2 kgs.)

COOPER Lighting Solutions

PHOTOMETRICS

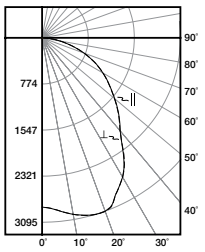

TBLED-LD1-8-M-UNV-L840-CD1

Electronic Driver
Linear LED 4000K
Spacing criterion: (II) 1.3 x mounting height, (⊥) 1.3 x mounting height
Lumens: 8133
Input Watts: 77W
Efficacy: 105.6 lm/W
Test Report: TBLED-LD1-8-M-UNV-L840-CD1.IES

Candlepower

Angle	Along II	45°	Across ⊥
0	2837	2837	2837
5	2900	2900	2899
10	3006	2996	3006
15	3079	3055	3083
20	3094	3044	3098
25	2910	2757	2907
30	2698	2552	2701
35	2376	2328	2393
40	2035	2020	2032
45	1818	1743	1812
50	1589	1493	1583
55	1376	1265	1373
60	1178	1064	1178
65	975	872	972
70	749	671	748
75	516	467	518
80	303	275	304
85	132	115	132
90	0	0	0

Coefficients of Utilization

Effective floor cavity reflectance 20%

rc	80%				70%				50%			30%			10%			0%
rw	70	50	30	10	70	50	30	10	50	30	10	50	30	10	50	30	10	0
RCR																		
0	119	119	119	119	116	116	116	116	111	111	111	106	106	106	102	102	102	100
1	109	104	100	96	106	102	98	95	98	95	92	94	91	89	90	88	86	84
2	99	91	85	79	97	89	83	78	86	81	76	83	78	74	80	76	73	71
3	91	80	72	66	88	79	71	65	76	70	64	73	68	63	71	66	62	60
4	83	72	63	56	81	70	62	56	68	61	55	65	59	54	63	58	54	52
5	77	64	55	49	75	63	55	48	61	54	48	59	52	47	57	51	47	45
6	71	58	49	43	69	57	49	43	55	48	42	53	47	42	52	46	41	39
7	66	53	44	38	64	52	44	38	50	43	38	49	42	37	48	42	37	35
8	61	48	40	34	60	47	39	34	46	39	34	45	38	33	44	38	33	31
9	58	44	36	31	56	44	36	31	43	35	30	41	35	30	40	34	30	28
10	54	41	33	28	53	40	33	28	39	32	28	38	32	28	38	32	27	26

Zonal Lumen Summary

Zone	Lumens	% Fixture
0-30	2462	30.3
0-40	3895	47.9
0-60	6534	80.3
0-90	8133	100.0
0-180	8133	100.0

Luminance Data

Angle in Deg	Average 0-Deg cd/sm	Average 45-Deg cd/sm	Average 90-Deg cd/sm
45	27841	26692	27749
55	25978	23882	25921
65	24982	22343	24905
75	21589	19539	21672
85	16400	14288	16400

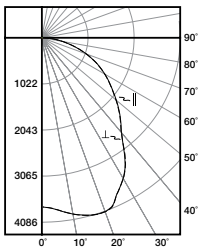

TBLED-LD1-11-M-UNV-L840-CD1

Electronic Driver
Linear LED 4000K
Spacing criterion: (II) 1.3 x mounting height, (⊥) 1.3 x mounting height
Lumens: 10735
Input Watts: 108W
Efficacy: 99.4 lm/W
Test Report: TBLED-LD1-11-M-UNV-L840-CD1.IES

Candlepower

Angle	Along II	45°	Across ⊥
0	3744	3744	3744
5	3828	3828	3826
10	3968	3954	3968
15	4064	4032	4069
20	4084	4018	4089
25	3841	3639	3837
30	3561	3368	3565
35	3136	3073	3158
40	2686	2666	2682
45	2399	2300	2391
50	2097	1970	2089
55	1816	1669	1812
60	1555	1404	1555
65	1287	1151	1283
70	988	885	987
75	681	616	683
80	400	363	401
85	174	151	174
90	0	0	0

Coefficients of Utilization

Effective floor cavity reflectance 20%

rc	80%				70%				50%			30%			10%			0%
rw	70	50	30	10	70	50	30	10	50	30	10	50	30	10	50	30	10	0
RCR																		
0	119	119	119	119	116	116	116	116	111	111	111	106	106	106	102	102	102	100
1	109	104	100	96	106	102	98	95	98	95	92	94	91	89	90	88	86	84
2	99	91	85	79	97	89	83	78	86	81	76	83	78	74	80	76	73	71
3	91	80	72	66	88	79	71	65	76	70	64	73	68	63	71	66	62	60
4	83	72	63	56	81	70	62	56	68	61	55	65	59	54	63	58	54	52
5	77	64	55	49	75	63	55	48	61	54	48	59	52	47	57	51	47	45
6	71	58	49	43	69	57	49	43	55	48	42	53	47	42	52	46	41	39
7	66	53	44	38	64	52	44	38	50	43	38	49	42	37	48	42	37	35
8	61	48	40	34	60	47	39	34	46	39	34	45	38	33	44	38	33	31
9	58	44	36	31	56	44	36	31	43	35	30	41	35	30	40	34	30	28
10	54	41	33	28	53	40	33	28	39	32	28	38	32	28	38	32	27	26

Zonal Lumen Summary

Zone	Lumens	% Fixture
0-30	3249	30.3
0-40	5141	47.9
0-60	8625	80.3
0-90	10735	100.0
0-180	10735	100.0

Luminance Data

Angle in Deg	Average 0-Deg cd/sm	Average 45-Deg cd/sm	Average 90-Deg cd/sm
45	36751	35235	36630
55	34290	31525	34217
65	32977	29494	32877
75	28496	25789	28609
85	21643	18860	21643

ORDERING INFORMATION

SAMPLE NUMBER: TBLED-LD1-6-M-UNV-L840-CD1-WHT

Series
TBLED=LED Top Bay

Lamp Type
LD1=LED 1.0

Lumen Package
6=6000 Lumens
8=8000 Lumens
11=11000 Lumens [10]

Distribution
M=Medium
W=Wide

Voltage
347V=347 Volt [4]
480V=480 Volt [3], [4]
UNV=Universal Voltage 120-277

Options
CCT
L835=3500K
L840=4000K
L850=5000K

Driver Type
CD=0-10V Dimming Driver (Standard)
5LTHD=Fifth Light DALI Driver (1%- 100% Dimming) [4], [8]

Number of Drivers
1=1 Driver
2=2 Drivers (5LTHD only) [8]

Mounting
[Blank]=Surface, Hook
WM=Wall Mount
PM=Pendant Mount [7]

Color
WHT=White
BLK=Black
BRZ=Bronze
AP=Gray
DP=Dark Platinum
GM=Graphite Metallic

Options (add a suffix)
CG=Clear Glass [5]
DOS=Dimming Occupancy Sensor
DIMRF-LW=LumaWatt Wireless Sensor, Wide Lens (8' - 16' mounting) [6]
DIMRF-LN=LumaWatt Wireless Sensor, Narrow Lens (16' - 40' mounting) [6]
TR=Tamper-resistant Hardware
IBP=Integral Battery Pack (Specify 120 or 277V. Must Specify Voltage) [1], [4]
ICP=Integral Cold Weather Battery Pack (Specify 120 or 277V. Must Specify Voltage) [2], [4]

Packaging
U=Unit Pack

Accessories (order separately)
FSIR-100=Wireless Configuration Tool for Occupancy Sensor
MA1252=10kV Circuit Module Replacement
C3=3' Cord [9]
C6=6' Cord [9]
PC3=3' Power Cord and Plug (Specify Voltage for Plug) [9]
PC6=6' Power Cord and Plug (Specify Voltage for Plug) [9]

NOTES: [1] Must specify voltage (120V and 277V available only). 0°C minimum, 25°C maximum ambient temperature. Not available with 11,000 lumen, WM, PM, or 5LTHD. [2] The ICP option is only available in 120V or 277V, must specify voltage. -20°C minimum, 25°C maximum ambient temperature. Not available with 11,000 lumen package. [3] Not to be used with un-grounded systems. [4] The 5LTHD, IBP and ICP options are not available with DOS, DIMRF-LN or DIMRF-LW or 347V/480V. [5] CG clear glass option only available with Medium distributions. [6] DIMRF-LN and DIMRF-LW are not available in 347 or 480V. [7] For Pendant Mount order separate Stem Kit. [8] 5LTHD option, requires 2 drivers for 8,000 and 11,000 lumen versions. [9] Sold separately and not pre-wired to the fixture. [10] Emergency options not available with this lumen package.

Specifications & dimensions subject to change without notice. Consult your Cooper Lighting Solutions Representative for availability and ordering information.

TBPM36 **WHT**

TBPM36=36"
TBPM48=48"
TBPM96=96"

WHT=White
BLK=Black
BRZ=Bronze

[Blank]=5 Conductor for use with 0-10V Dimming Driver
5LTHD=5 Conductor for use with 5LTHD Drivers

Cooper Lighting Solutions
1121 Highway 74 South
Peachtree City, GA 30269
P: 770-486-4800
www.cooperlighting.com

Specifications and dimensions subject to change without notice.

ENERGY AND PERFORMANCE DATA BY CATALOG NUMBER

Catalog Number	Description	Delivered Lumens	Watts	Efficacy (lm/W)
Medium				
TBLED-LD1-6-M-UNV-L835-CD1-WHT-U	Low Bay, WaveStream LED, 6K Lumen, Med Dist, 3500K, Dim	5643	51	111
TBLED-LD1-6-M-UNV-L840-CD1-WHT-U	Low Bay, WaveStream LED, 6K Lumen, Med Dist, 4000K, Dim	5774	51	113
TBLED-LD1-6-M-UNV-L850-CD1-WHT-U	Low Bay, WaveStream LED, 6K Lumen, Med Dist, 5000K, Dim	6420	51	126
TBLED-LD1-8-M-UNV-L835-CD1-WHT-U	Low Bay, WaveStream LED, 8K Lumen, Med Dist, 3500K, Dim	7948	77	103
TBLED-LD1-8-M-UNV-L840-CD1-WHT-U	Low Bay, WaveStream LED, 8K Lumen, Med Dist, 4000K, Dim	8133	77	106
TBLED-LD1-8-M-UNV-L850-CD1-WHT-U	Low Bay, WaveStream LED, 8K Lumen, Med Dist, 5000K, Dim	9044	77	117
TBLED-LD1-11-M-UNV-L835-CD1-WHT-U	Low Bay, WaveStream LED, 11K Lumen, Med Dist, 3500K, Dim	10491	108	97
TBLED-LD1-11-M-UNV-L840-CD1-WHT-U	Low Bay, WaveStream LED, 11K Lumen, Med Dist, 4000K, Dim	10735	108	99
TBLED-LD1-11-M-UNV-L850-CD1-WHT-U	Low Bay, WaveStream LED, 11K Lumen, Med Dist, 5000K, Dim	11937	108	111
Wide				
TBLED-LD1-6-W-UNV-L835-CD1-WHT-U	Low Bay, WaveStream LED, 6K Lumen, Wide Dist, 3500K, Dim	5342	51	105
TBLED-LD1-6-W-UNV-L840-CD1-WHT-U	Low Bay, WaveStream LED, 6K Lumen, Wide Dist, 4000K, Dim	5466	51	107
TBLED-LD1-6-W-UNV-L850-CD1-WHT-U	Low Bay, WaveStream LED, 6K Lumen, Wide Dist, 5000K, Dim	6078	51	119
TBLED-LD1-8-W-UNV-L835-CD1-WHT-U	Low Bay, WaveStream LED, 8K Lumen, Wide Dist, 3500K, Dim	7524	77	98
TBLED-LD1-8-W-UNV-L840-CD1-WHT-U	Low Bay, WaveStream LED, 8K Lumen, Wide Dist, 4000K, Dim	7699	77	100
TBLED-LD1-8-W-UNV-L850-CD1-WHT-U	Low Bay, WaveStream LED, 8K Lumen, Wide Dist, 5000K, Dim	8561	77	111
TBLED-LD1-11-W-UNV-L835-CD1-WHT-U	Low Bay, WaveStream LED, 11K Lumen, Wide Dist, 3500K, Dim	9932	108	92
TBLED-LD1-11-W-UNV-L840-CD1-WHT-U	Low Bay, WaveStream LED, 11K Lumen, Wide Dist, 4000K, Dim	10163	108	94
TBLED-LD1-11-W-UNV-L850-CD1-WHT-U	Low Bay, WaveStream LED, 11K Lumen, Wide Dist, 5000K, Dim	11300	108	105

LUMEN MAINTENANCE

Ambient Temperature	TM-21 Lumen Maintenance (60,000 Hours)	Theoretical L70 (Hours)
40°C	85%	165,000